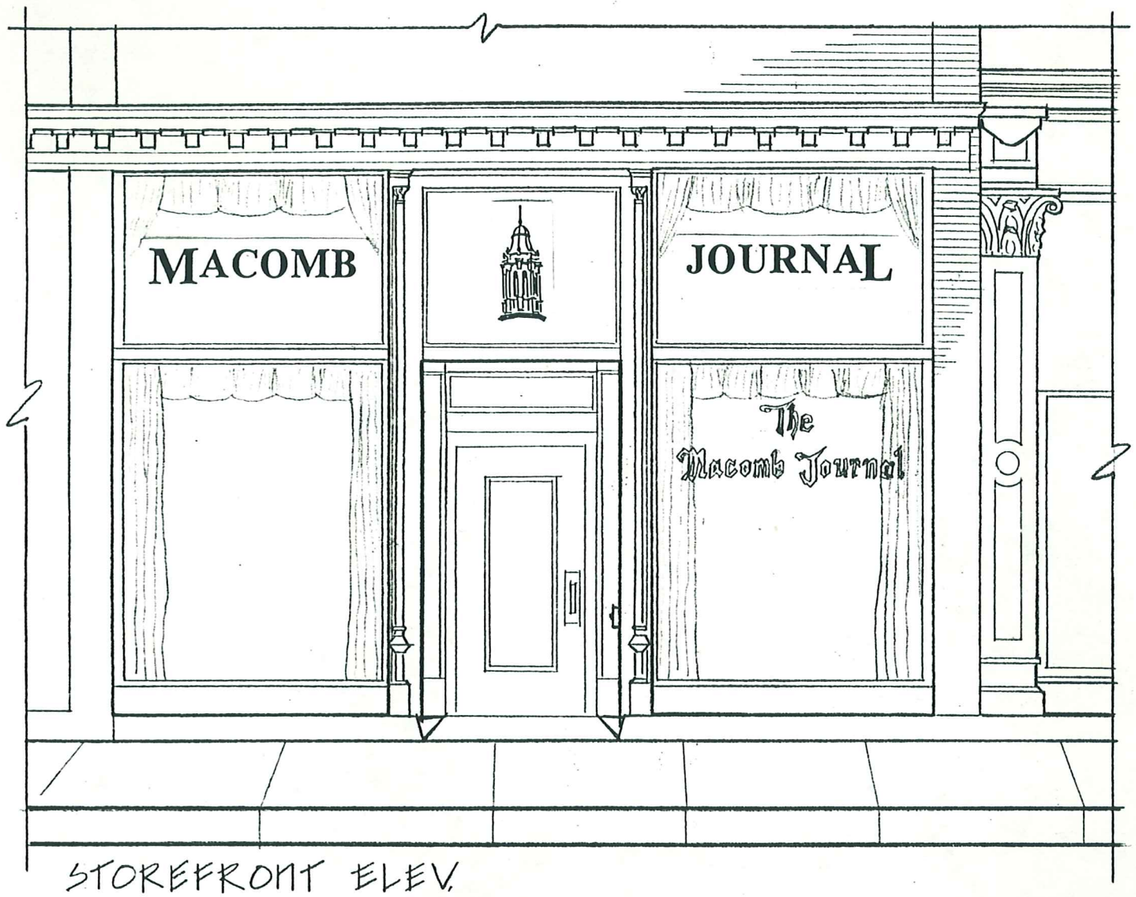

STOREFRONT ELEV.

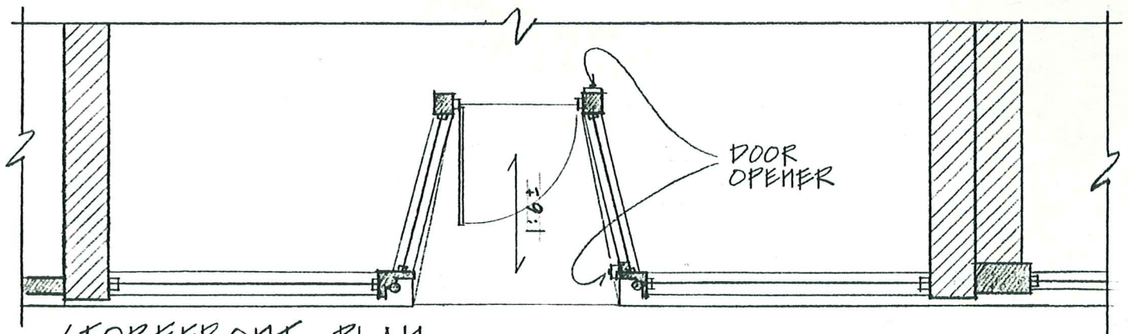

STOREFRONT PLAN

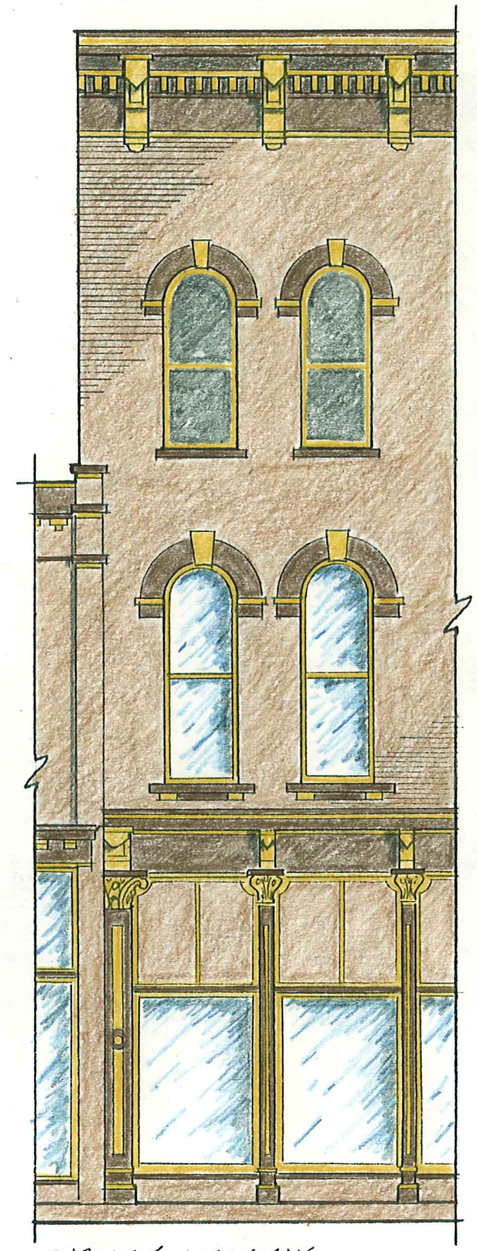

PAINT SCHEME

PAINT COLORS:

BASE:

TRIM:

DETAILS:

Note: The *Illinois* MAIN STREET Program, through the Illinois Historic Preservation Agency, has provided this free design assistance to qualified property/business owners in the officially designated MAIN STREET project areas. The rendering on this sheet is a conceptual view of the facade renovation based on information supplied to the staff architect. Should obscured architectural details or problems be revealed during the work, the local project manager and/or the staff architect should be consulted.

Illinois MAIN STREET
OFFICE OF LIEUTENANT GOVERNOR BOB KUSTRA
Architectural Services: **Illinois Historic Preservation Agency**
1 Old State Capitol Plaza/Springfield, Illinois 62701/217-782-9336

MACOMB JOURNAL
N. LAFAYETTE ST.
MACOMB, IL

ENTRY & PAINT DESIGN
NOT TO SCALE

Drawn by:	Project No.
DEG	9441
Date:	Sheet: Of:
4-95	1 1